卷册检索号 SEARCH NO. OF THE VOLUME
MLHVDC-LCS-ECI-DD-HA-0211 30-B003701S-N0211

第 1 页 PAGE　共 1 页 OF

图纸文件目录（首页）

CATALOG OF DRAWING DOCUMENTS (HEAD PAGE)

拉合尔±660kV换流站 工程 施工图 阶段
±660kV Lahore Converter Station PROJECT Detail Design DESIGN STAGE

暖通 专业 第 02 卷 第 11 册
HVAC SPECIALITY VOLUME BOOK

卷册名称 专用品库通风及空调
Volume name Special materials storage HVAC Drawing

批　准 APPROVED BY	和卫东
审　核 REVIEWED BY	和卫东
设计/勘测 DESIGNED BY/ SURVEYED BY	吕笑宇
图纸 2 张 DRAWING NOS.	打印件 0 本 PRINTED COPIES NOS.

序号 No.	图　号 DRAWING NO.	文件名称 DOCUMENT TITLE	版本 EDITION	张 NOS.	本 NOS.	备注 REMARKS
1	30-B003701S-N0211-001	专用品库通风和空调工程设计及施工说明 Ventilation and Air-Conditioning Project Design & Construction Specifications	A	1		
2	30-B003701S-N0211-002	专用品库空调平面图 Special materials storage Air-Conditioning plan	A	1		

注:

通风和空调工程设计说明

Ventilation and Air-Conditioning Project Design Specifications

一、 工程概况

Ⅰ. Project Overview

1. 项目名称：巴基斯坦默蒂亚里—拉合尔±660kV直流输电工程/拉合尔±660kV换流站

Project name：±660kV HVDC Project from Matiari to Lahore in Pakistan

2. 建设单位：国家电网/中国电力技术装备有限公司

Development organization：State Grid / China Electric Power Equipment And Technology CO .TD

3. 设计范围：站前区1栋单体

Design scope: The first Building Area / about 1 building

4. 单体概况：

单体名称	建筑层数	建筑高度 m	建筑面积 m^2	室内外高差 m	建筑分类	耐火等级
专用品库	1	5.35	28	0.45	丙类仓库	二级

结构形式：框架　　结构使用年限：50年

抗震设防烈度：7度半　　防水层使用年限：15年

Building Overview:

Name	Building Storey	Height m	Area m^2	Altitude intercept m	Building classification	fire resistance rating
Special materials storage	1	5.35	28	0.45	class C warehouse	second level

Structural style: frame structure　　Service life of structure: 50 years

Earthquake fortification intensity: 7degree and a half　　Life of waterproof layer: 15years

二、 室内外设计参数

Ⅱ. Indoor and outdoor design parameters

1. 室外气象参数

Outdoor meteorological parameter

夏季室外计算干球温度：43.2℃

Summer outside dry-bulb temperature:

夏季室外计算湿球温度：23.2℃

Summer outside wet-bulb temperature:

供暖室外计算温度：3.9℃

Heating outdoor temperature:

极端最高气温：48.0℃（2007.6.10）

Extreme maximum temperature:

极端最低气温：−2.2℃（2008.1.22）

Extremely minimum temperature:

年平均气压：983.1hPa

Annual mean atmospheric pressure:

年平均相对湿度：57%

Annual mean relative humidity:

年平均风速：1.6m/s

Annual mean air speed:

主导风向：NW

Prevailing wind direction:

2. 室内参数

Indoor parameters

参数 Parameter / 房间名称 Room name	夏季 Summer		冬季 Winter	
	℃	%	℃	%
专用品库 Special materials storage	26～28	≤70%	16～18	−−

三、冷热源配备与设备

Ⅲ. Cold and heat source outfit and equipment

本工程的空调系统采用空气源热泵型分体式空调器的形式，空调室外机统一设置在设备平台或地面上，空调冷凝水排至就近地漏或散水。

The air conditioning system of this project is the form of air-source heat pump air conditioner, which is set on the equipment platform or ground, and the air-conditioner condenses water to the nearest floor drain or aproll.

通风和空调工程施工说明（一）

Ventilation and Air-Conditioning Project Construction Specifications (1)

一、一般规定

Ⅰ. General regulations

1．空调通风工程的施工验收应本说明进行，说明中未详之处均应遵照国家标准执行，执行规范如下：

The construction acceptance of air-conditioning and ventilation project shall be performed in accordance with the Specifications. Any detail not described in the Specifications shall adhere to national standards. The codes to be applied are shown as follow:

A.《通风和空调工程施工质量验收规范》　GB 50243-2016

Code for Acceptance of Construction Quality of Ventilation and Air Conditioning Works

B.《通风与空调工程施工规范》　GB 50738-2011

Code for Construction of Ventilation and Air Conditioning Works

C.《机械设备安装工程施工及验收通用规范》　GB 50231-2009

General Code for Construction and Acceptance of Mechanical Equipment Installation Engineering

D.《家用和类似用途空调器安装规范》　GB 17790-2008

Installation specifications for household and similar air-conditioning

E.《通风管道技术规程》　JGJ 141-2004

Technical Procedure of Air Duct

2．图中的尺寸单位：

Unit of dimensions in drawings

标高以米计；其余尺寸以毫米计。

Elevation is indicated in meter; the rest dimensions are indicated in millimeter.

二、水管管道

Ⅱ. Water pipes

1．管材及连接要求见下表：

See the below table for the piping and connection requirements:

表一 管材及连接方式　Table 1: Piping and connection method

管道种类 Type of pipe	管径（mm）Pipe diameter	材料及连接方式 Material and connection method	备注 Remarks
空调冷凝水管 Air-conditioning condensate pipes		UPVC管粘接 UPVC pipe adhesion	

2．空调冷凝水管应顺排水方向设置坡度安装，其坡度不得小于0.008，严禁倒坡；空调器的空气冷凝水管应设存水弯（有效水封高度不小于80mm）或其他隔气措施。

Air-conditioning condensate pipes shall be mounted at a preset gradient along the water drainage direction and their gradient shall not be less than 0.008; a backward slope is forbidden; water traps (The effective water seal height is not less than 80mm.) or other vapor barrier measures shall be taken for the air condensate pipes of air conditioners.

3．管道穿墙或楼板处必须设置套管，其内径应比管道或保温层外径大20～30mm。

Sleeves must be set up in the places where pipes pass through walls or floor slabs and their inner diameter shall be larger than that of pipes or thermal insulating layer by 20-30mm.

安装在墙体内的套管，其两端应 与墙饰面相平；穿楼板的套管应比建筑面层高30mm。

The both ends of the sleeves mounted inside walls shall be flush with wall finishing; the sleeves passing through floor slabs shall be higher than the surface layer of building by 30mm.

管道的接头焊缝不得设在套管内。在保温工程竣工后，套管与保温层外径之间的空隙用不燃保温材料塞紧。

No joint welding seams of pipes shall be located inside the sleeves. After the completion of thermal insulation work, the gaps between the sleeves and the outer diameter of thermal insulating layers are tightly filled up with inflammable thermal insulating materials.

4．管道的支、吊架详见国标图集 05R417-1。

See the drawing atlas 05R417-1 of national standard for the details of pipe supports and hangers.

5．空调冷凝水管必须作充水试验，无渗漏为合格。

Air-conditioning condensate pipes must undergo a water filling test. They are acceptable if no leakage occurs.

6.管道安装前必须必须将管内污物及锈蚀清除干净，安装时应保持管道的清洁，严禁施工杂物等落入管内。

Before the installation of pipes, dirt and rust inside the pipes must be cleaned off. During the installation, the cleanliness of pipes shall be kept. It is prohibited to allow any foreign materials from construction to fall into the pipes.

管道压力试验合格后应进行系统清洗，直至系统排出水色和透明度与入口水目测一致为合格，清洗后过滤器应及时拆洗干净。

After the pressure test of pipes is passed, system cleaning shall be carried out. It is not accepted, until the color and transparency of the water discharged from the system become consistent with those of inlet water with visual inspection. After cleaning, filters shall be removed and cleaned up in time.

三、油漆、保温：

Ⅲ. Painting and thermal insulation:

（一）油漆：

(Ⅰ) Painting:

1．管道在试压、清洗合格后方能进行除锈和油漆工作。

Only after pipes are accepted in their pressure test and cleaning, rust removal and painting work can be performed.

2．所有非镀锌铁件均须除锈后刷防锈漆两度；非保温者再刷面漆两度。

All non-galvanized iron pieces must be painted in two passes with anti-rust paint after rust removal; the pieces which are not thermally insulated shall be additionally painted in two passes with finishing paint.

3．非镀锌支、吊架、法兰应在安装前完成除锈、刷漆工作。

Before installation, rust removal and painting work for non-galvanized supports, hangers and flanges shall be completed.

4．风管角钢法兰先进行两度防锈底漆处理后方可铆接到风管上。

Angle iron flanges of ducts can be riveted onto ducts only after anti-rust primer treatment is performed on them in two passes at first.

5．管道最外层显眼处应涂识别色或识别环，识别环宽度应不小于50mm，最大间隔为6m。

An obvious position in the outermost layer of pipes shall be painted in identification color or identification rings. The width of identification rings shall not be less than 50mm and the maximum spacing between them shall be 6m.

（二）保温：

(Ⅱ) Thermal insulation:

1. 所有保温及其辅助材料必须采用不燃或难燃型产品；穿越防火墙的保温风管，在防火墙两侧 2m 范围内须采用不燃材料保温。

All thermal insulating materials and their auxiliary materials to be used must be incombustible or nonflammable products; the thermally-insulated air ducts passing through fire walls must be thermally insulated with incombustible materials within the range of 2 m in both sides of fire walls.

2．空调冷凝水管采用难燃型发泡橡塑保温，20℃时，λ≤0.037W/(m.k)，厚度均为15mm。

Air-conditioning cold and hot water pipes and air-conditioning condensate pipes are thermally insulated. The thermal insulation requirements are shown as follow: Air-conditioning condensate pipes are thermally insulated with the following non-flammable type foaming rubber and plastics: λ≤0.037W/(m.k) at 20℃ and thickness = 15mm.

四、热泵型分体式空调器安装

Ⅳ. Installation of heat pump type air conditioner

（一）室内机安装

(Ⅰ) Installation of indoor units

1．将室内机安装到吊导螺栓上，上下用螺母垫圈固定，螺栓规格视室内机重量固定。

Indoor units are mounted onto suspension bolts and their upper and lower ends are fixed with nuts and washers. The specifications of bolts depend on the weight of indoor units.

一般室内机在 2匹以下,采用螺栓 M8；大于3匹的采用担机。

Generally, if the power of indoor units is below 2 horsepower, M8 bolts shall be used; if it is above 3 horsepower, cabinet type indoor unit shall be used.

2．用水平仪校对机体水平度，水平度应保证在 ±1mm/m之内，严禁向排水口倾斜。

Calibrate the levelness of units with a leveling instrument. It shall be ensured that the degree of levelness is within ±1mm/m. Their inclination to drainage outlets is prohibited.

通风和空调工程施工说明（二）

Ventilation and Air-Conditioning Project Construction Specifications (2)

（二）室外机安装

(Ⅱ) Installation of outdoor units

1．室外机安装在室外地面上时，应设置在散水范围内，机组下可垫设槽钢支架。

When outdoor units are mounted on the outdoor ground surface, they should be in the range of aproll, cushion steel brackets under the units.

（三）制冷剂管道安装

(Ⅲ) Installation of refrigerant pipes

1．制冷剂管的配管和保温应由经销商供应，并按国家有关规定设置和安装。

The piping and thermal insulation of refrigerant pipes shall be supplied by the dealer and they shall be set up and installed in accordance with relevant national regulations.

2．制冷剂配管连接允许长度及配管连接允许的高度差按厂家室外机安装说明。

Refer to the outdoor unit installation instructions of manufacturer for the allowable length for refrigerant piping connections and the allowable height difference for piping connections.

3．制冷剂管道弯管的弯曲半径应大于5D（管道直径），配管弯曲后的椭径与原直径之比应大于2/3。

The bending radius of elbows in refrigerant pipes shall be more than 5D (D = Diameter of pipes). The ratio of the short diameter of bent piping to the original diameter shall be more than 2/3.

4．管道穿越墙体或楼板处应设钢制保护套管，保护套管应与墙面或楼板底平齐，高出地面30mm。

Steel protection sleeves shall be set up in the places where pipes pass through walls or floor slabs. The protection sleeves shall be flush with the surface of walls or the bottom of floor slabs. They shall be higher than the ground surface by 30mm.

5．套管与管道四周间隙均匀，应用隔热不燃材料严密封堵。

The clearance between the sleeves and the surrounding of pipes shall be uniform and it shall be tightly sealed up with heat insulating incombustible materials.

（四）制冷剂管道吊架支撑

(Ⅳ) Hanger supporting for refrigerant

水平管道应用吊架或托架支撑，支撑间距考虑铜管的热胀冷缩，不允许将保温厚的制冷剂管道夹紧,支撑间距见下表：

Horizontal pipes shall be supported with hangers or brackets. For the supporting spacing, the thermal expansion and contraction of copper pipes shall be taken into account. It is not allowed to clamp the refrigerant pipes with thick thermal insulation. See the below table for the supporting spacing:

公称直径 Nominal diameter（mm）	≤20	25～40	50
最大间距 Maximum spacing（m）	1.0	1.5	2.0

（五）制冷剂管道清洗与试压

(Ⅴ) Cleaning and pressure test of refrigerant pipes

1．铜管安装前必须进行脱脂，并用清洁布擦干净。

Before the installation of copper pipes, degreasing must be performed and they must be cleaned up with clean cloth.

施工结束后必须对制冷剂配管进行吹扫，清除管内可能存在的水汽、灰尘和垃圾等脏物，吹扫只能采用氮气,冲洗压力为0.6MPa，经反复冲洗至管内无污物为合格。

After the completion of construction, refrigerant piping must be purged to clean off the dirt possibly existing in the pipes, such as moisture, dust, rubbish and etc. Only nitrogen can be used for purging. The flushing pressure is 0.6MPa. When no dirt is present in the pipes with repeated flushing, they are accepted.

2．对制冷剂管道系统（除室外机外）应进行气密性试验及真空度试验。

Air-tightness tests and vacuum tests shall be performed on refrigerant pipe systems (except for outdoor units).

当制冷剂为 R22时，管道系统气密性试验压力为 2.8MPa，且需保压 24小时，系统应无泄漏。

When the refrigerant is R22, the pressure for air-tightness test of pipe systems is 2.8MPa, the pressure shall be kept for 24 hours, and the system shall have no leakage.

五、设备安装

Ⅴ. Installation of equipment

1．设备安装前应按设计要求检验其型号、规格，应有产品合格证和安装使用说明书，核对无误时方能进行安装。

Before the installation of equipment, its model number and specifications shall be checked in accordance with design requirements. The installation can be performed only when the conformity certificate and installation and operation instructions of product are present and they are checked for no error.

安装应按说明书要求进行或由供货商提供指导，吊装时应安全、稳妥，受力点不得使设备产生扭曲变形或损伤。

The installation shall be performed in accordance with the requirements in the instructions or it shall be performed with the directions provided by the supplier. Lifting shall be carried out safely and properly. Force-bearing points shall not lead to the occurrence of distortion, deformation or damage to the equipment.

2．所有设备安装用的预埋件、预留洞等应与土建施工单位密切配合，避免遗漏和返工。

For the pre-embedded pieces and preformed holes used for the installation of all equipment, the close cooperation with civil work construction unit shall be made to avoid omissions and reworking.

Reference Drawings

Drwg. No.	Title

Revisions

	Name	Date	Notes

巴基斯坦默蒂亚里—拉合尔±660kV直流输电工程

±660kV HVDC Project from Matiari to Lahore in Pakistan

NATIONAL TRANSMISSION & DESPATCH COMPANY (NTDC) LIMITED PAKISTAN

CONTRACTOR 国家电网 STATE GRID 中国电力技术装备有限公司 CHINA ELECTRIC POWER EQUIPMENT AND TECHNOLOGY CO.,LTD.

SUBCONTRACTOR East China Electric Power Design Institute Co.,Ltd.

拉合尔±660kV换流站

±660kV Lahore Converter Station

设计阶段 PHASE：施工图 Detail Design

M L H V D C - L C S - E C I - D D - H A - 0 2 1 1 - 0 0 1 A

	姓名 Name	日期 Date
设计 Designed	张交芳	
校核 Checked	王新林	
审核 Reviewed	郑刚	
批准 Approved	郑刚	
比例 Scale		图号 DWG NO.

专用品库通风和空调工程设计及施工说明

Ventilation and Air-Conditioning Project Design & Construction Specifications

30-B003701S-N0211-001　版本 REV. A

594X841

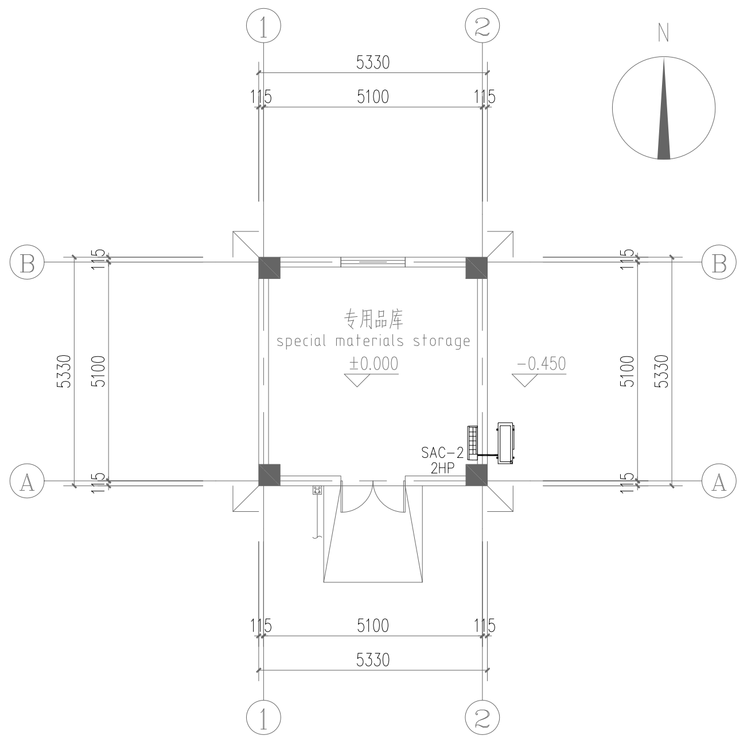

一层空调平面图 1:100

Air-Conditioning plan on the First floor

S=28.41m²

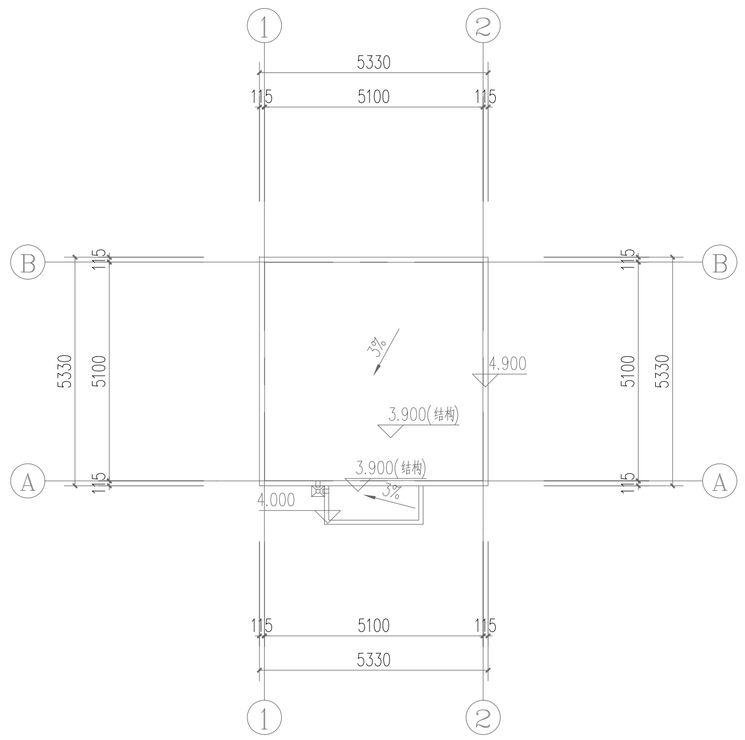

屋顶平面图 1:100

Plan on the Roof

配件表：Parts Preferences：

冷凝水管(UPVC)	condensate pipe (UPVC)	De25	米 m	1
橡塑保温管壳	rubber and plastic insulation shell	δ=15mm	立方米 m³	0.002

备注： Note:

1. 壁挂式室内机中心距地 2.1m，室外机底高于当层地坪(设备平台)100mm以上；
   The wall hanging type indoor unit center is 2.1 m from the room floor, the bottom of the outdoor unit is higher than the currentfloor (the equipment platform) 100mm above；
2. 空调冷凝水顺坡排至就近地漏或散水；
   The air-conditioner condenses water down the slope to the nearest floor drain or aproll；
3. 设计说明见图纸 B003701S-N0211-001。
   The design description is shown in the drawing B003701S-N0211-001.

分体空调设备性能表：Split air conditioner Preferences：

设备编号 serial number	设备名称 device name	制冷量 capacity	制热量 capacity	制冷剂 media	室内机 indoor unit		电源要求 electrical source			套数 amount	备注 note
					重量 weight	循环风量 air volume	输入功率 input power	电源 electrical source	备注 note		
		kW	kW		kg	m³/h	kW	ø-V-Hz			
SAC-2	热泵型壁挂式(家用) Heat pump wall type(household)	5.0	5.6	R22	13.0	800	1.82	1-220-50	配电至内机 power to indoor unit	1	T3 工况 T3 working condition

图例 legend

SAC 分体空调室外机(侧出风) outdoor unit(sideward)

SAC 分体空调室内机(柜式) indoor unit(cabinet type)

Reference Drawings

Drwg. No.	Title

Revisions

Name	Date	Notes

巴基斯坦默蒂亚里—拉合尔±660kV直流输电工程

±660kV HVDC Project from Matiari to Lahore in Pakistan

NATIONAL TRANSMISSION & DESPATCH COMPANY (NTDC) LIMITED PAKISTAN

CONTRACTOR 国家电网 STATE GRID 中国电力技术装备有限公司 CHINA ELECTRIC EQUIPMENT GROUP CO.,LTD.

SUBCONTRACTOR East China Electric Power Design Institute Co.,Ltd.

拉合尔±660kV换流站

±660kV Lahore Converter Station

设计阶段 PHASE: 施工图 Detail Design

M L H V D C - L C S - E C I - D D - H A - 0 2 1 1 - 0 0 2 A

	姓名 Name	日期 Date
设计 Designed	吴交芳	
校核 Checked	王新林	
审核 Reviewed	郑刚	
批准 Approved	郑刚	

专用品库空调平面图

Special materials storage Air-Conditioning plan

专业 Speciality	会签 Sign	日期 Date
结构 Structure		
电气 Electrical		
暖通 HVAC		
给排水 Water supply and drainage		

比例 Scale: 1:100 | 图号 DWG NO.: 30-B003701S-N0211-002 | 版本 REV.: A

594X841